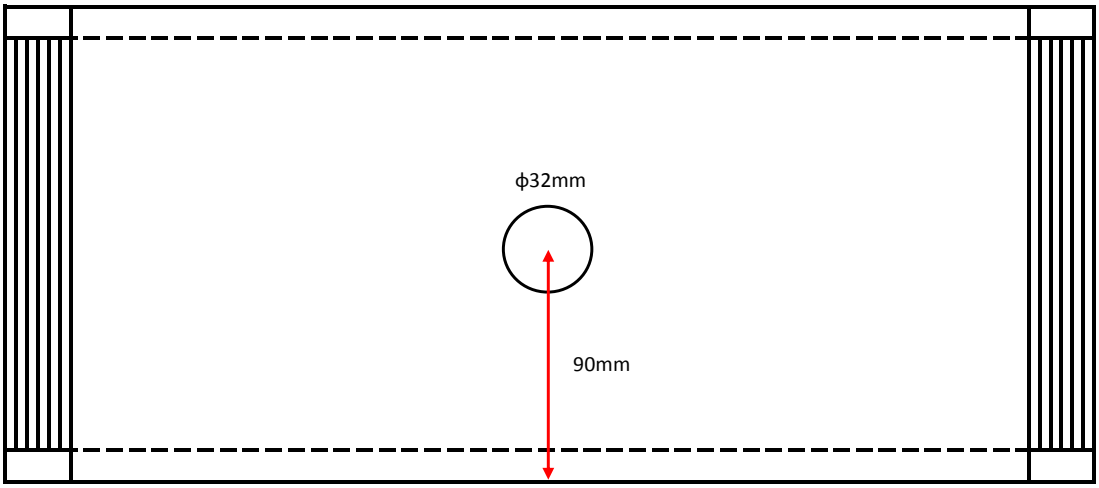
ϕ32mm
90mm

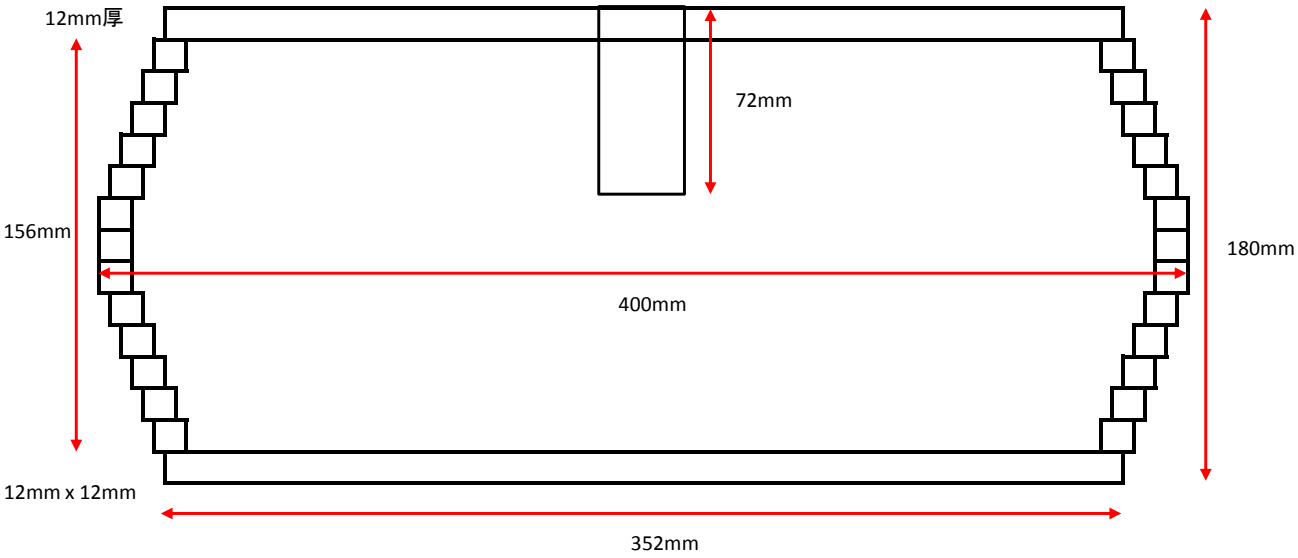
12mm厚
72mm
156mm
180mm
400mm
12mm x 12mm
352mm

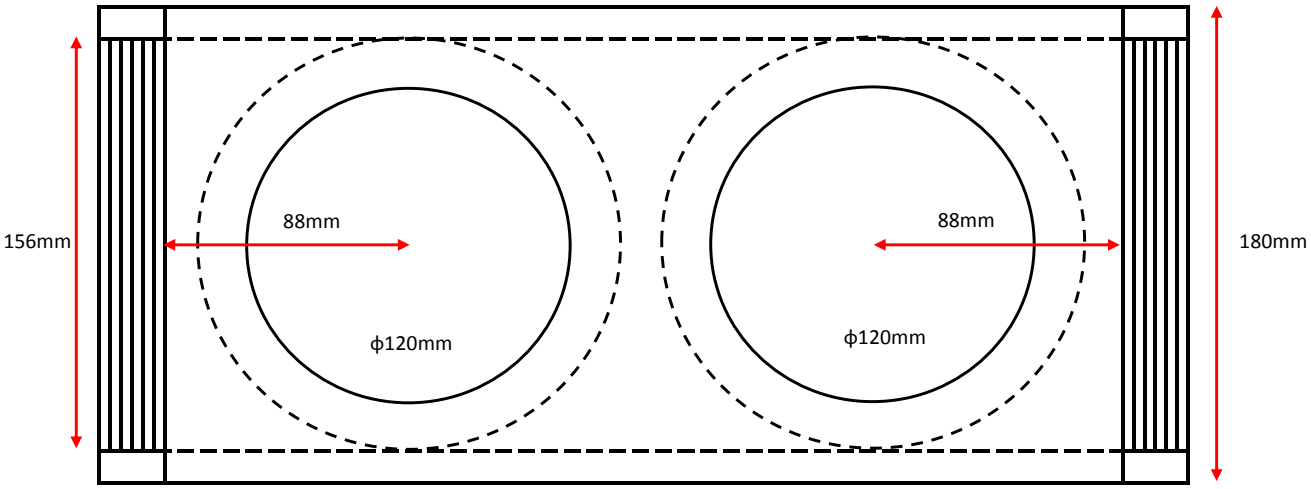
156mm
88mm
ϕ120mm
88mm
ϕ120mm
180mm

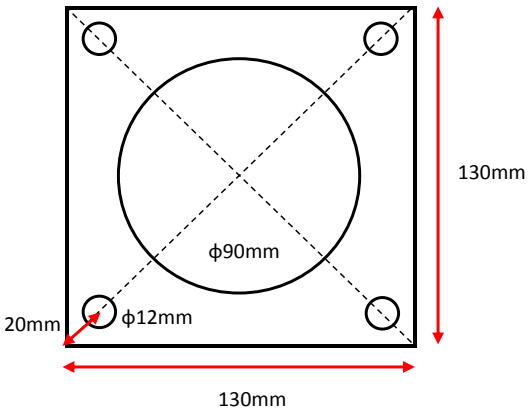
130mm
ϕ90mm
20mm
ϕ12mm
130mm